Cambridge International Examinations
Cambridge International General Certificate of Secondary Education

CANDIDATE NAME	

CENTRE NUMBER						CANDIDATE NUMBER					

2114069006

DESIGN AND TECHNOLOGY **0445/43**

Paper 4 Systems and Control **May/June 2018**

1 hour

Candidates answer on the Question Paper.

No Additional Materials are required.

READ THESE INSTRUCTIONS FIRST

Write your Centre number, candidate number and name on all the work you hand in.
Write in dark blue or black pen.
You may use an HB pencil for any diagrams or graphs.
Do not use staples, paper clips, glue or correction fluid.
DO **NOT** WRITE IN ANY BARCODES.

Section A
Answer **all** questions in this section.

Section B
Answer **one** question in this section.

You may use a calculator.

At the end of the examination, fasten all your work securely together.
The number of marks is given in brackets [ ] at the end of each question or part question.
The total of the marks for this paper is 50.

This document consists of **18** printed pages and **2** blank pages.

© UCLES 2018

Section A

Answer **all** questions in this section.

1 Fig. 1 shows the rear derailleur gear on a cycle with a close up view of the gear cable.

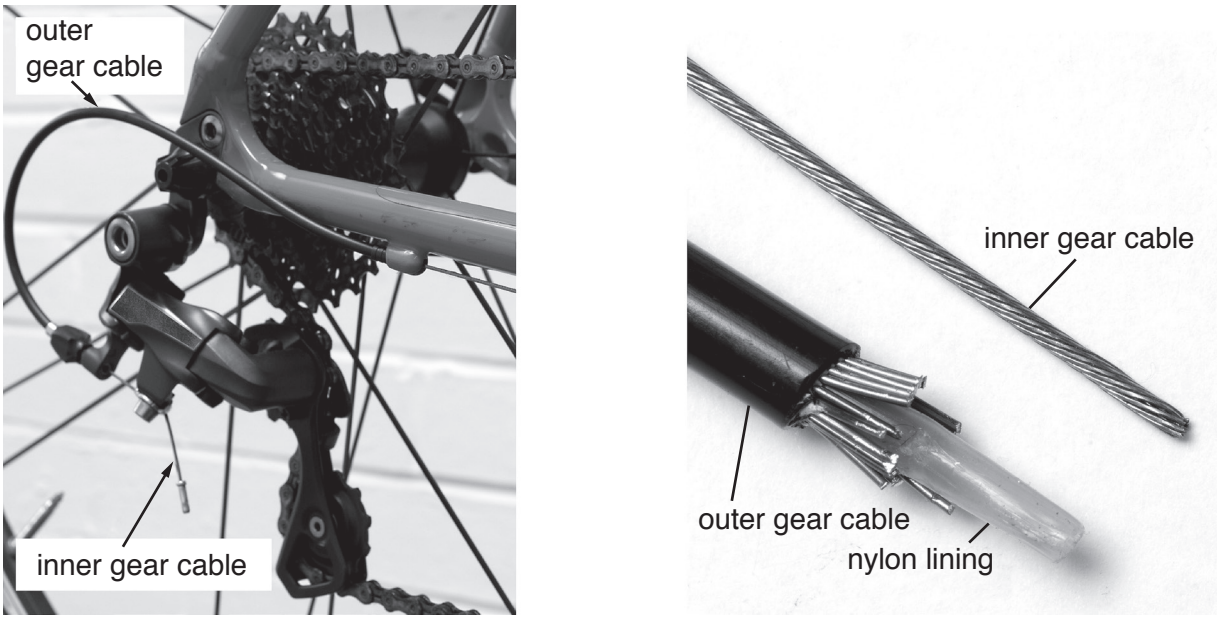

Fig. 1

(a) Name the force that has been applied, when manufacturing the inner gear cable to keep the strands of cable in position.

.....[1]

(b) The outer gear cable has a nylon lining.
Give **two** benefits of using the nylon lining.

1 .....

2 .....
[2]

(c) Explain why small radius bends should be avoided in the gear cable when it is attached to the cycle.

.....

.....

.....[2]

2 **(a)** Explain why steel is used for control cables on a cycle.

.....

.....

.....[2]

(b) State the force being used when a control cable is operated.

.....[1]

3 Hydraulic systems are now used for many applications rather than a control cable.

State the force created in a hydraulic system.

.....[1]

4 Fig. 2 shows the speed control lever on a wood turning lathe.

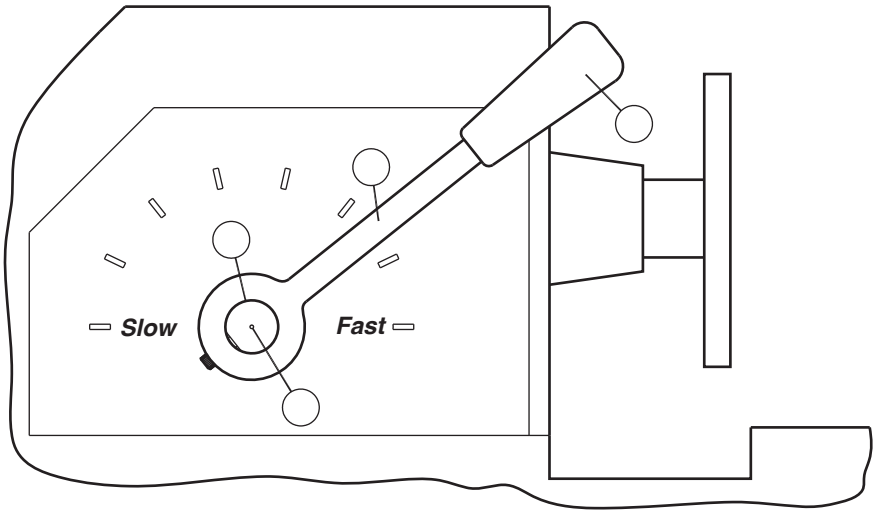

Fig. 2

(a) Complete **three** of the labels to show the position of effort, load and fulcrum on the lever when it is used to change the speed of the lathe. [3]

(b) State the order of lever used.

.....[1]

5 Choose from the terms below to complete the table.

bevel gear **idler gear** **rack and pinion** **worm gear**

Requirement	Method
Transfer drive through 90° with no change in speed	
Provide a large reduction in speed in a small space	
Make driver and driven shafts rotate in the same direction	

[3]

6 Fig. 3 shows a piece of rod with a square thread cut into it.

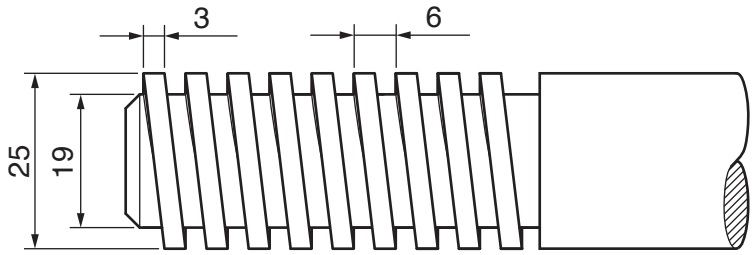

Fig. 3

State the pitch of the thread.

.....[1]

7 Fig. 4 shows two logic symbols with truth tables for each.

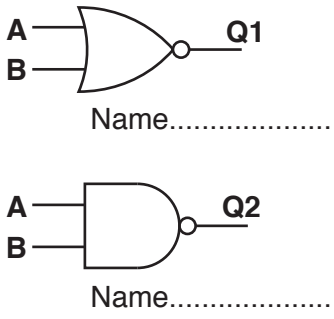

A	B	Q1	Q2
0	0		
0	1		
1	0		
1	1		

Fig. 4

(a) Write the name under each symbol. [2]

(b) Complete the truth table. [2]

8 A catalogue describes two capacitors in the following way:

- electrolytic capacitor 3300 μF 30 Vdc ± 20%
- ceramic capacitor 100 pF 50 Vdc ± 10%.

(a) Explain what is meant by 30 Vdc and 50 Vdc in the description of the capacitors.

.....

.....

.....[2]

(b) State why the electrolytic capacitor value is likely to vary more from its stated value than the ceramic capacitor.

.....

.....[1]

9 Name the discrete component used with a capacitor to produce a delay in a circuit.

.....[1]

Section B

Answer **one** question in this section.

10 Fig. 5 shows the initial design for a scaffold to give safe access while building work is carried out.

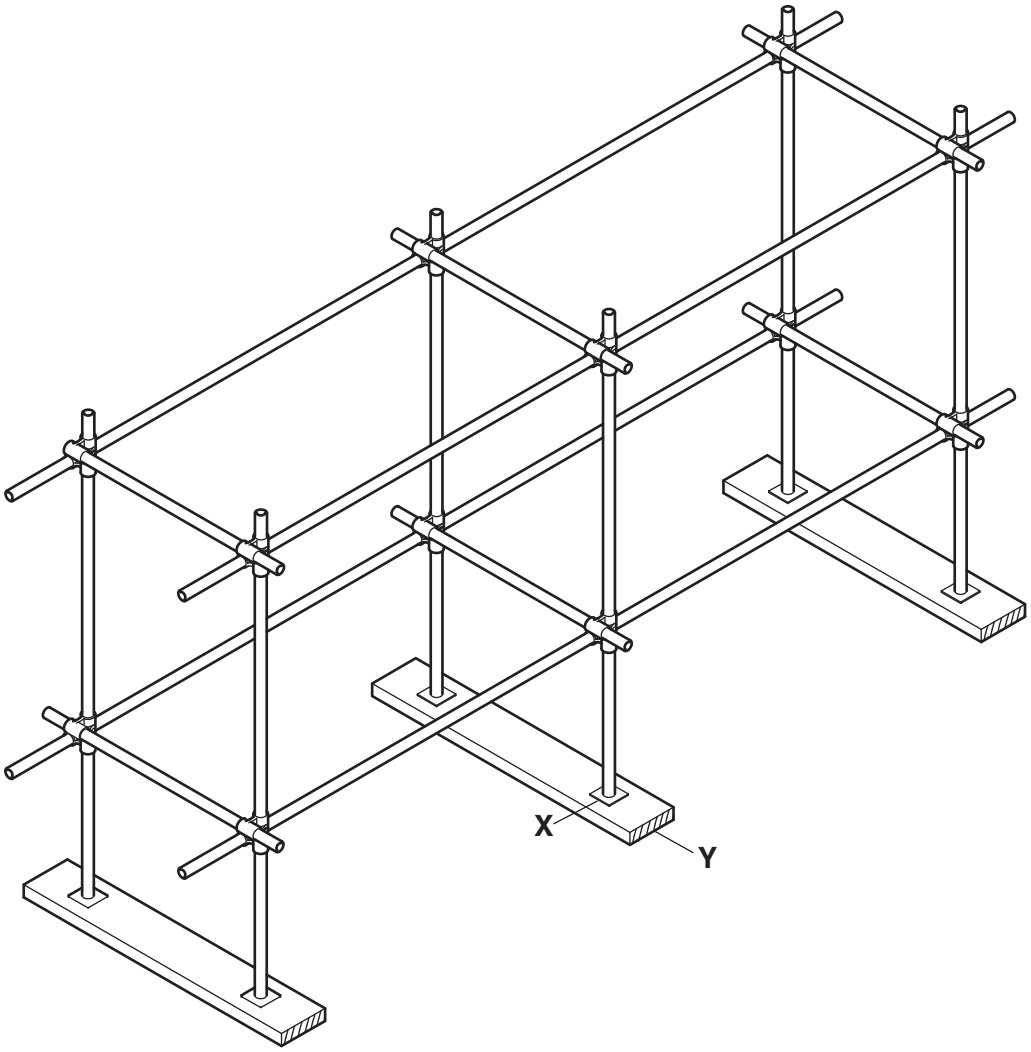

Fig. 5

(a) **(i)** Name the type of structure used in scaffolding.

.....[1]

(ii) Draw on Fig. 5 **three** additional scaffolding poles to make the structure rigid and safe from collapse. [3]

(iii) Explain the purpose of features **X** and **Y** at the base of the scaffold.

.....

.....

.....[2]

(iv) When scaffolding is designed, a factor of safety for the structure is considered. Explain what is meant by a factor of safety.

.....

.....

.....[2]

(b) Workers on a construction site have to wear 'hard hats' as shown in Fig. 6.

Fig. 6

(i) State the type of structure used in the hard hat.

..... [1]

(ii) Explain how the strength of the hard hat has been improved without adding any extra material.

.....

.....

.....[2]

(c) Fig. 7 shows the axes for a stress/strain graph for mild steel.
The position of three features that will appear on the graph are marked.

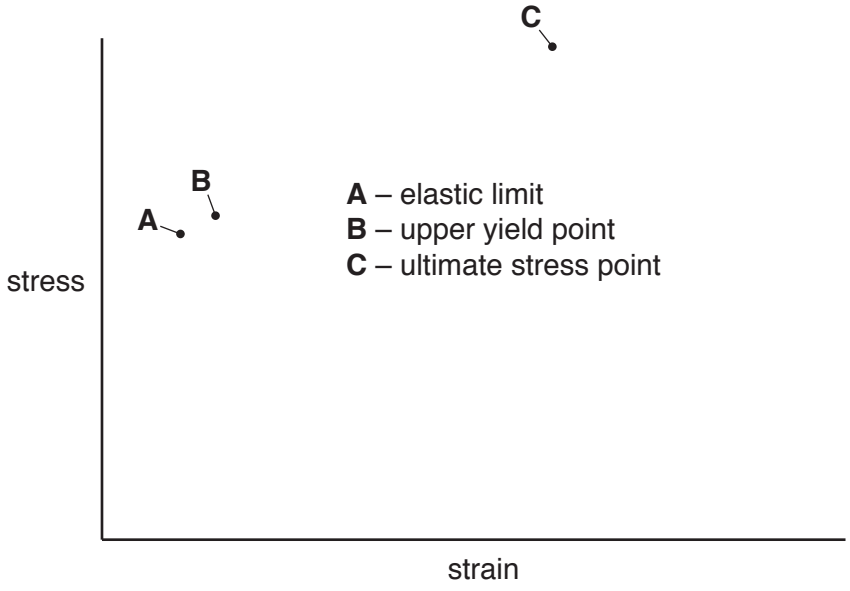

Fig. 7

(i) Draw the shape of the graph on Fig. 7. [3]

(ii) Explain what is meant by 'elastic limit' on the graph.

.....

.....

.....

.....[2]

(d) Fig. 8a shows a folding clothes airer in the assembled position.

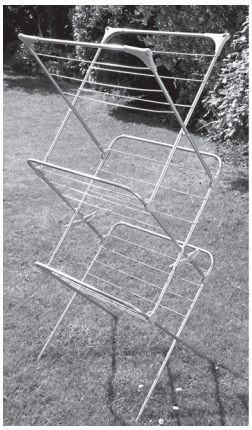

Fig 8a

Fig. 8b

(i) Name the strengthening feature on the clothes airer shown in Fig. 8b.

.....[1]

(ii) Give **two** reasons for using the type of strengthening feature shown in Fig. 8b.

1 .....

.....

2 .....

.....

[2]

(iii) The load carrying ability of each rail in the clothes airer is to be tested.
Use sketches and notes on Fig. 9 to show how a dial gauge could be fixed to give a positive reading on the gauge when a load is added to the centre of the Ø6 rail.

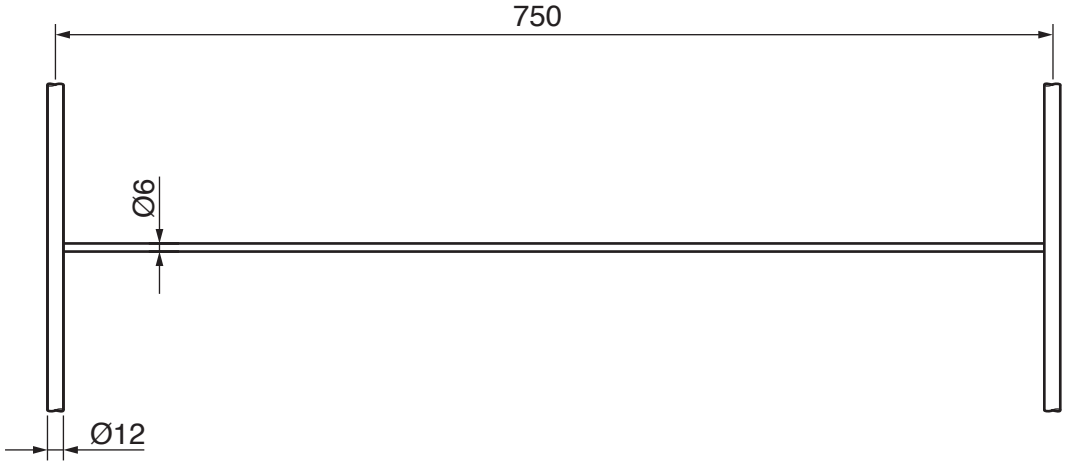

[3]

Fig. 9

Question 10 continues on the next page

(e) Fig. 10 shows two concrete pillars.

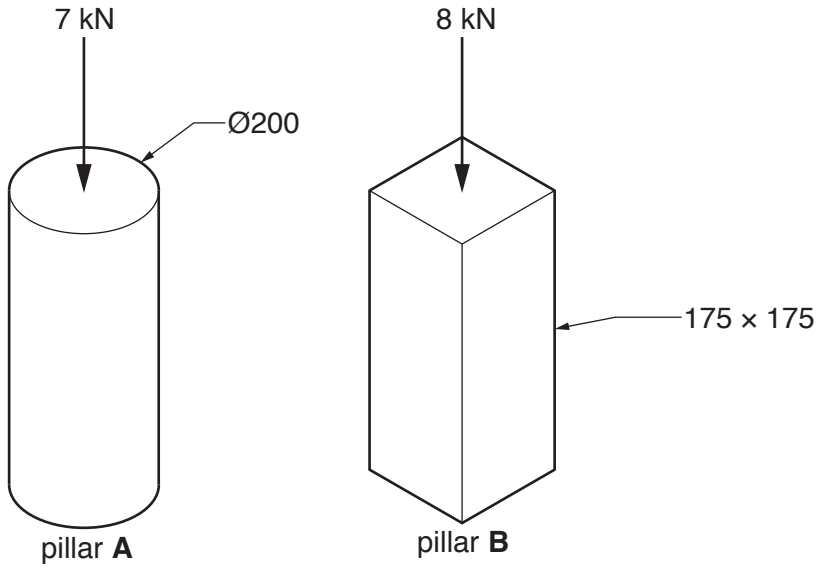

Fig. 10

Calculate which pillar is subject to the greatest stress when the loads are applied.

Use the formula: stress = $\frac{\text{force}}{\text{cross sectional area}}$

.....

.....

.....

.....[3]

11 Fig. 11 shows views of the chain drive on a cycle.

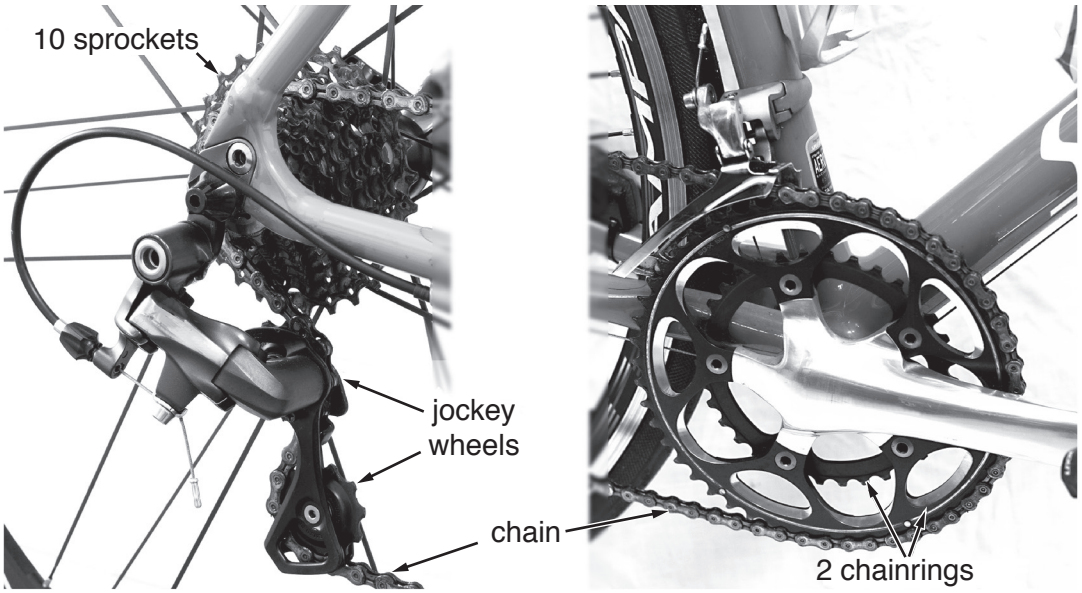

Fig. 11

(a) **(i)** Describe **two** functions of the jockey wheels in the chain drive.

1 .....

.....

2 .....

.....
[2]

(ii) Calculate the number of gear ratios that are available on the cycle.

.....

.....[2]

(iii) Name the factor, in addition to the number of sprockets and chainrings that will determine how far the cycle will travel for each rotation of the chainring.

.....[1]

(b) **(i)** Explain why a chain should be lubricated.

.....

.....

.....[2]

(ii) State why grease is not suitable for lubricating a chain.

.....

.....[1]

(c) Fig. 12 shows three different types of bearing that can be used in a jockey wheel.

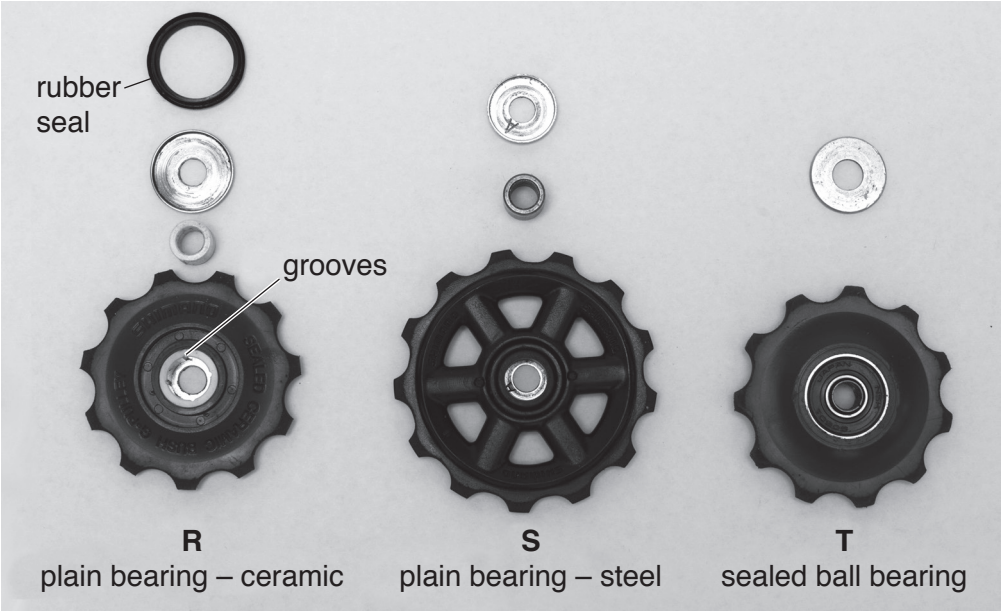

Fig. 12

(i) Give **one** reason for using a rubber seal either side of the bearing in type **R**.

.....

.....[1]

(ii) The outer bearing face in type **R** has four grooves cut into the surface; this is a common feature when using plain bearings.
State the reason for the grooves.

.....

.....[1]

(iii) Give **one** benefit for each of the bearing types used in **S** and **T**.

Bearing **S** .....

.....

Bearing **T** .....

.....
[2]

(d) Fig. 13 shows the blade guide for a small bandsaw used for cutting timber.
By turning handle **A** the guide can be raised or lowered to allow different thicknesses of timber to be cut.

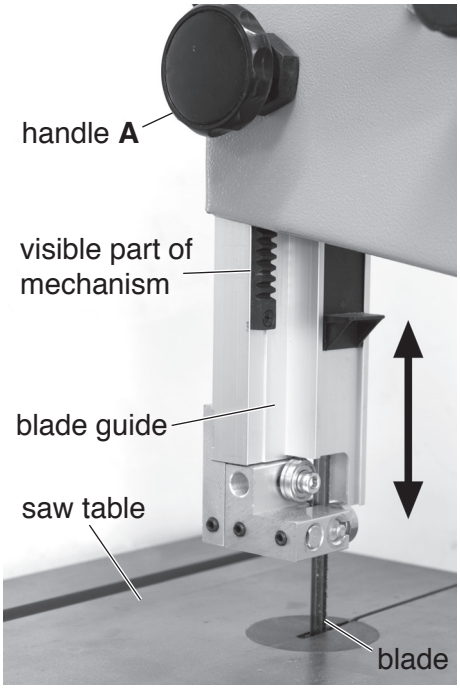

Fig. 13

(i) Name the mechanism used to raise and lower the blade guide when handle **A** is turned.

.....[2]

(ii) State the conversion of motion which takes place when handle **A** is turned and the blade guide moves.

..... to ..... [2]

(iii) When the bandsaw is in use there are energy losses.
Name **two** ways in which the energy from the motor can be lost when the machine is in use.

1 .....

.....

2 .....

.....
[2]

(iv) Describe how energy loss in a powered machine can be reduced.

.....

.....

.....[2]

(v) The guide fence for the saw is held securely in place by a cam lever shown in Fig. 14.

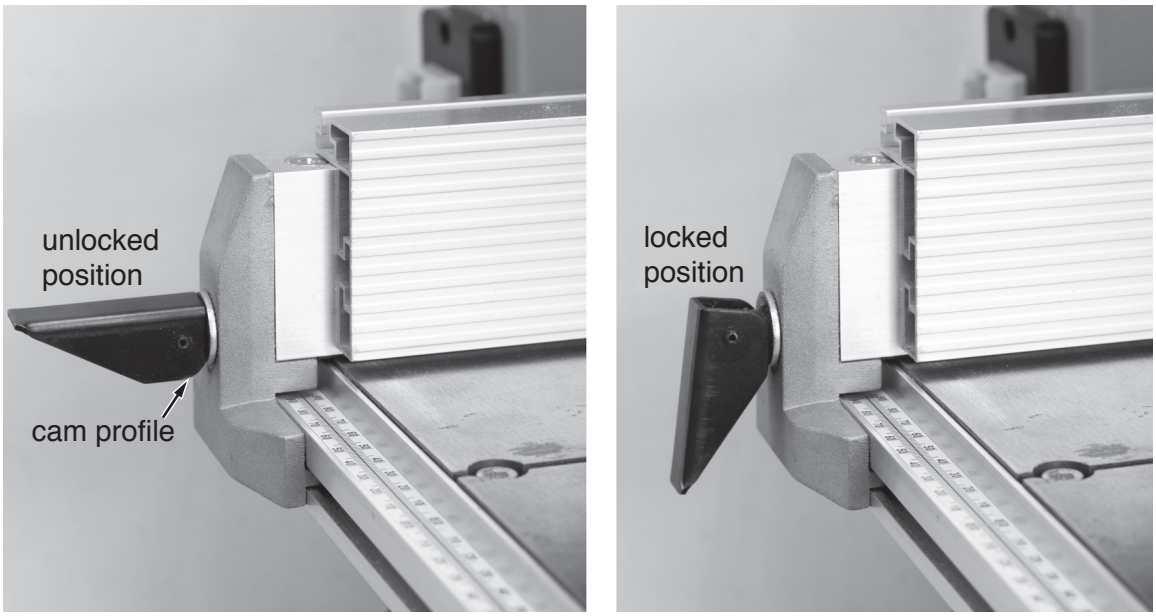

Fig. 14

Explain why cams are often used where frequent adjustment is necessary.

.....

.....

.....[2]

(e) Fig. 15 shows a compound pulley system.

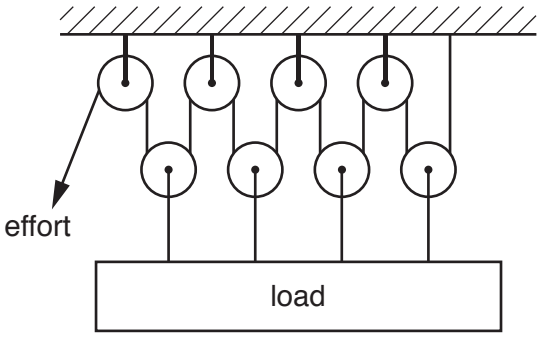

Fig. 15

(i) State the mechanical advantage of the pulley system.

.....[1]

(ii) Calculate the pulling force necessary to raise a load of 1.5 kN.

.....

.....

.....[2]

12 **(a)** Fig. 16 shows a push switch that could be either a PTM switch or a PTB switch, the two types are identical in size and colour.

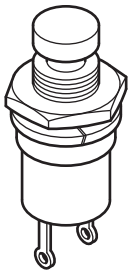

Fig. 16

Use sketches and notes to explain how the switch action can be identified using a multimeter on a resistance setting.

[3]

(b) Fig. 17 shows three types of connecting wire that could be used to connect a switch to a circuit board.

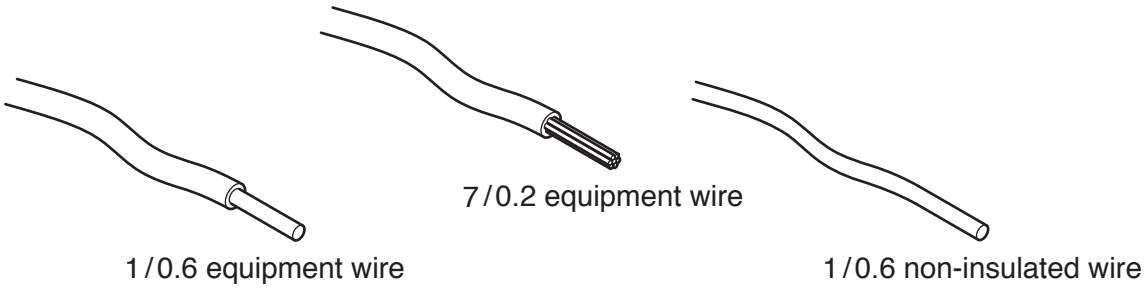

Fig. 17

(i) State which type of connecting wire is the most suitable.

.....[1]

(ii) Give **one** reason for your choice of connecting wire.

.....

.....[1]

(iii) Use sketches and notes to describe **four** stages in soldering a connecting wire to a switch terminal.

[4]

(c) Fig. 18 shows a method of connecting a number of wires on a ribbon cable to a circuit board.

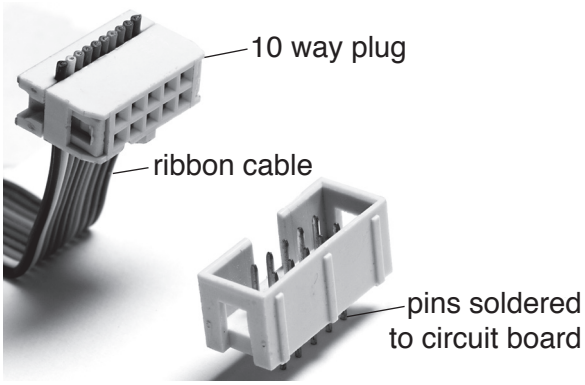

Fig. 18

Give **two** advantages of using this method rather than soldering individual wires to the circuit board.

1 .....

.....

2 .....

.....

[2]

(d) Fig. 19 shows a conveyor belt in a supermarket checkout area.
The belt keeps going until an item of shopping blocks the path between the light source and an LDR on the other side of the conveyor belt.

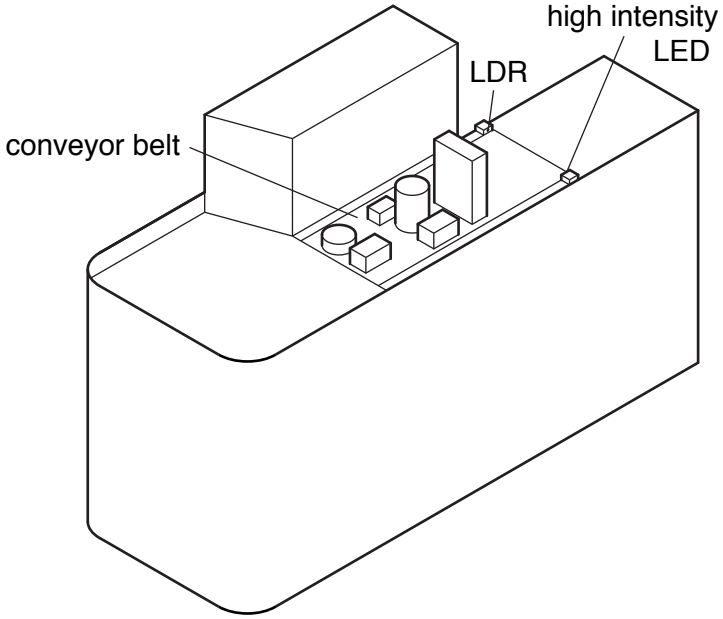

Fig. 19

(i) Part of the operating circuit for the conveyor belt is shown in Fig. 20.

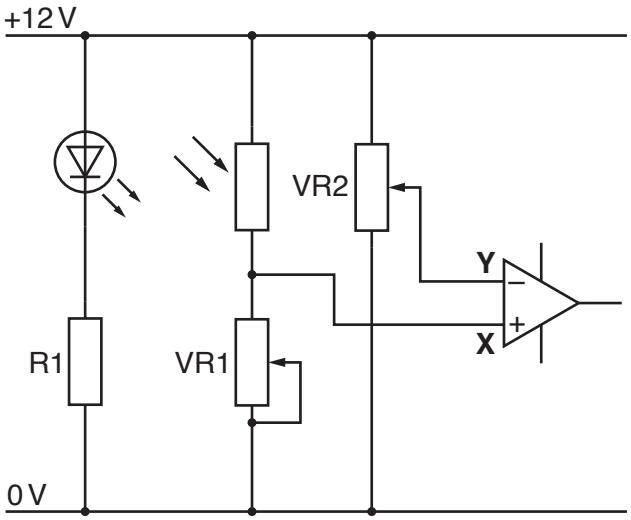

Fig. 20

Calculate the value of R1 that should be used to allow the high intensity LED to draw a current of 40 mA. The forward voltage of the LED is 3.4 V.

.....

.....

.....

.....[3]

(ii) The operating circuit uses a CA3140 operational amplifier to compare the voltage from the LDR potential divider with a reference voltage provided by VR2 potential divider.
Explain what is meant by 'potential divider'.

.....

.....

.....[2]

(iii) Explain the operation of a voltage comparator.

.....

.....

.....

.....[3]

(iv) State **two** ways of changing the sensitivity of the circuit.

1 .....

2 .....
[2]

(v) The high output of the CA3140 operational amplifier is +10 V with a maximum current of 10 mA, which is not enough to operate the motor.
Complete Fig. 21 to show a transistor circuit that will operate the relay to switch the motor on and off.

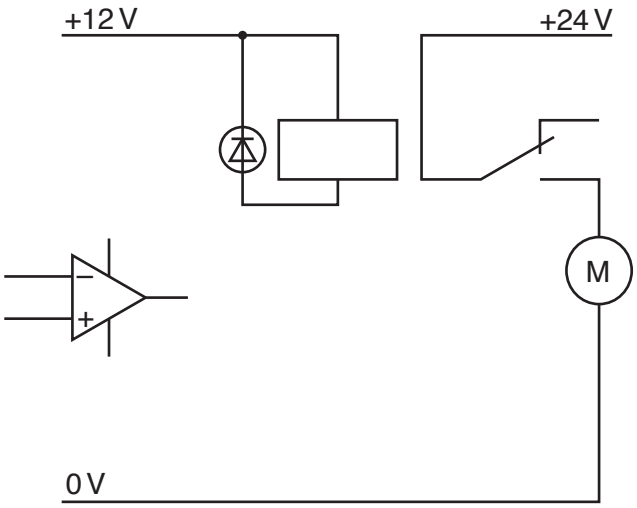

[3]

Fig. 21

(vi) Give **one** reason for using a relay to switch the motor on and off.

.....

.....[1]

BLANK PAGE

BLANK PAGE

Permission to reproduce items where third-party owned material protected by copyright is included has been sought and cleared where possible. Every reasonable effort has been made by the publisher (UCLES) to trace copyright holders, but if any items requiring clearance have unwittingly been included, the publisher will be pleased to make amends at the earliest possible opportunity.

To avoid the issue of disclosure of answer-related information to candidates, all copyright acknowledgements are reproduced online in the Cambridge International Examinations Copyright Acknowledgements Booklet. This is produced for each series of examinations and is freely available to download at www.cie.org.uk after the live examination series.

Cambridge International Examinations is part of the Cambridge Assessment Group. Cambridge Assessment is the brand name of University of Cambridge Local Examinations Syndicate (UCLES), which is itself a department of the University of Cambridge.

© UCLES 2018